地址：江苏省昆山市高新区玉城中路1号密友科技工业园B栋4楼
ADD：4th Floor, Building 3, No.1 Yucheng Middle Road, Yushan Town,Kunshan City,liangsu Province
E-lail：century-dream@163.com/King@maicre-tech.com
Web：www.maicre-tech.com

2026

昆山泓瑞凯运动科技有限公司

KUNSHAN HOVERIC SPORTS SCIENCE TECHNOLOGY CO..LTD

勇于挑战，探索未来
Be brave to challenge and explore the future
HOVERIC
BREEZE OF CHAMPION

ABOUT US

泓瑞凯，来自于一群从事自行车设计生产和精密加工制造、花鼓研发与销售、以及自行车骑手，凝聚在一起的精英合作团队！ 十几年，甚至数十年来的深耕和满腔热情，开辟出一条追逐更高梦想的赛道！

泓瑞凯，致力于自行车、锂电车、电动摩托车花鼓的设计开发与制造，立足昆山、服务全球！

专业的设计理念、精密的加工工艺 和卓越的品质控制体系，持续倾听客户的声音，与全球高端自行车和锂电车业者建立紧密的联系与合作，成为自行车领域的积极参与者和奉献者！

Hoveric，comes from an elite collaborative team of engaged in design and production of complete bicycles、precision machining、research and sales of Hub、racing knights. More than a decade,even decades of deep cultivation and passion opened up a new path to pursue higher dreams.

Hoveric is focusing on the R&D and manufacturing of Hubs for Bicycle/E-bike/E-Motorcycle,Based in Kunshan and serving the world!

From professional design concepts, precision machining, excellent quality control systems, and continuously listening to customer voices,establishing near connections and cooperation with global friends, becoming an cative participant and contributor in the bicycle field all over the world.

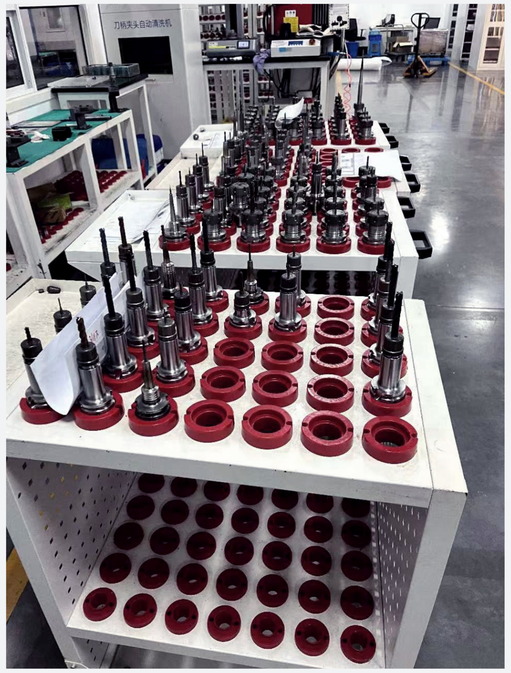

- HOVER RATCHET COMBINATION SYSTEM -

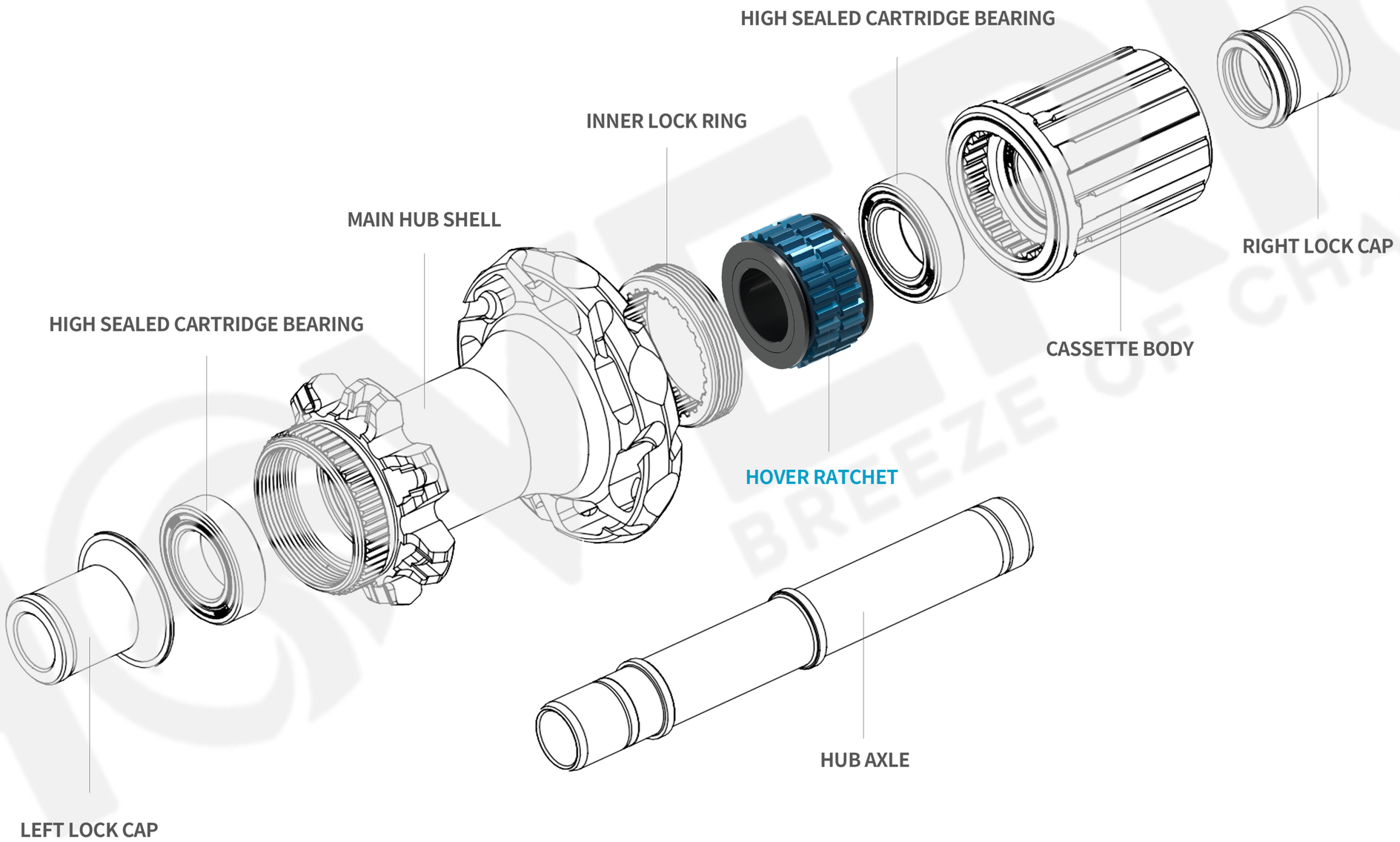

CONTENTS

ROAD C-BRAKE JB ---------- 01-02
ROAD D-BRAKE JB ---------- 03-08
ROAD C-BRAKE SP ---------- 09
ROAD D-BRAKE SP ---------- 10-12
ROAD D-BRAKE JB (HOVER RATCHET) ---------- 13
ROAD D-BRAKE SP (HOVER RATCHET) ---------- 14

MTB D-BRAKE JB ---------- 16-22
MTB D-BRAKE SP ---------- 23-28
MTB D-BRAKE JB (HOVER RATCHET) ---------- 29
MTB D-BRAKE SP (HOVER RATCHET) ---------- 30
MTB D-BRAKE SP (E-BIKE) ---------- 32

FAT D-BRAKE JB ---------- 33-34
BMX JB ---------- 35-36
FIXIE JB ---------- 37
TRI-CYCLE ---------- 39-40
SPARE PARTS ---------- 41-42

经营理念

诚信经营、快速服务、科技创新、迈向未来

品质政策

标准至上、全员参与、精益求精、持续改善

企业文化

打造高效协作团队、持续倾听客户声音，
淬炼核心竞争力、向更高的目标稳步迈进

Management Idea

Sincerity Business、Fast service、
Technological innovation、Driving future

Quality policy

Standard first、Full participation、
Refine on excellence、Continuousimprovement

Company culture

Build an efficient collaborative team，Continue to listen to customers,Refine core competitiveness，and steadily move towards higher goals

HOVERIC
BREEZE OF CHAMPION

HF0001

Spoke Hole: **13/14G, 24/28/32/36H**
Axle System: **M9*108**
O. L .D: **100**
Axle Material: **Steel**
Flange PCD: **38mm**
Flange Spacing: **72mm**
Rollong System: **Loose Balls**
Weight: **152g**

OPTIONS

HF0001A **3/8*100*145**

HR0001

Spoke Hole: **13/14G, 24/28/32/36H**
Axle System: **M10*140/145**
O. L .D: **130/135**
Axle Material: **steel**
Flange PCD: **45mm**
Flange Spacing: **62.5mm**
Rollong System: **Loose Balls**
Freewheel: **7S**
Weight: **260g**

OPTIONS

HR0001A **3/8*135*180**

HR0002

Spoke Hole: **13/14G, 24/28/32/36H**
Axle System: **M10*140/145**
O. L .D: **130/135**
Axle Material: **Steel**
Flange PCD: **45mm**
Flange Spacing: **72mm**
Rollong System: **Loose Balls**
Freehub Body: **steel Shimano 11S**
Weight: **397g**

OPTIONS

HR0002A **3/8*135*180**

HF2001

Spoke Hole: **13/14G, 24/28/32/36H**
Axle System: **M9*108**
O. L .D: **100**
Axle Material: **Steel**
Flange PCD: **38mm**
Flange Spacing: **67mm**
Sealed Cartridge Bearings(SB): **2pcs**
Weight: **178g**

OPTIONS

HF2001A **3/8*100*145**

HR2002

Spoke Hole: **13/14G, 24/28/32/36H**
Axle System: **M10*140/145**
O. L .D: **130/135**
Axle Material: **steel**
Flange PCD: **45mm**
Flange Spacing: **52mm**
Sealed Cartridge Bearings(SB): **2pcs**
Freehub Body: **steel Shimano 11S**
Weight: **403g**

OPTIONS

HR2002A **3/8*135*180**

HF4001

Spoke Hole: **14G, 20/24/28/32H**
Axle System: **M9*108**
O. L .D: **100**
Axle Material: **AL7075**
Flange PCD: **32mm**
Flange Spacing: **74mm**
Sealed Cartridge Bearings(SB) : **2pcs**
Weight: **76g**

HR4001

Spoke Hole: **14G/24/ 28/32H**
Axle System: **M10*140**
O. L .D: **130**
Axle Material: **AL7075**
Flange PCD: **38/54mm**
Sealed Cartridge Bearings(SB): **4pcs**
Freehub Body: **Shimano 11S**
Sram XDR
Weight: **233g**

OPTIONS

HR4002 **M10*130*140 XDR**

HF1101

Spoke Hole: **13/14G, 28/32/36H**
Axle System: **M9*108**
O. L .D: **100**
Axle Material: **steel**
Flange PCD: **45/58mm**
Flange Spacing: **58mm**
Rollong System: **Loose Balls**
Weight: **229g**

OPTIONS

HF1101A **IS6 3/8*100*145**

HF3101

LIGHT

Spoke Hole: **13/14G, 28/32/36H**
Axle System: **M9*108**
O. L .D: **100**
Axle Material: **steel**
Flange PCD: **45/58mm**
Flange Spacing: **58mm**
Sealed Cartridge Bearings(SB): **2pcs**
Weight: **217g**

OPTIONS

HF3101A **IS6 3/8*100*145**

HF1201

Spoke Hole: **13/14G, 24/28/32/36H**
Axle System: **M9*108**
O. L .D: **100**
Axle Material: **steel**
Flange PCD: **45mm**
Flange Spacing: **56.5mm**
Rollong System: **Loose Balls**
Weight: **189**

OPTIONS

HF1201A **CL 3/8*100*145**

HF3201

Spoke Hole: **13/14G, 24/28/32/36H**
Axle System: **M9*108**
O. L .D: **100**
Axle Material: **steel**
Flange PCD: **45mm**
Flange Spacing: **56.5mm**
Sealed Cartridge Bearings(SB): **2pcs**
Weight: **204g**

OPTIONS

HF3201A **CL 3/8*100*145**

HR1102

Spoke Hole: **13/14G, 28/32/36H**
Axle System: **M10*145**
O. L .D: **135**
Axle Material: **steel**
Flange PCD: **45/58mm**
Flange Spacing: **55mm**
Rollong System: **Loose Balls**
Freehub Body: **steel Shimano 11S**
Weight: **442g**

OPTIONS

HR1102A **IS6 3/8*135*180**

HR3102

LIGHT

Spoke Hole: **13/14G, 28/32/36H**
Axle System: **M10*145**
O. L .D: **135**
Axle Material: **steel**
Flange PCD: **45/58mm**
Flange Spacing: **55mm**
Sealed Cartridge Bearings(SB): **2pcs**
Freehub Body: **steel Shimano 11S**
Weight: **452g**

OPTIONS

HR3102A **IS6 3/8*135*180**

HR1202

Spoke Hole: **13/14G, 24/28/32/36H**
Axle System: **M10*145**
O. L .D: **135**
Axle Material: **steel**
Flange PCD: **48mm**
Flange Spacing: **55mm**
Rollong System: **Loose Balls**
Freehub Body: **steel Shimano 11S**
Weight: **404g**

OPTIONS

HR1202A **CL 3/8*135*180**

HR3202

Spoke Hole: **13/14G, 24/28/32/36H**
Axle System: **M10*145**
O. L .D: **135**
Axle Material: **steel**
Flange PCD: **48mm**
Flange Spacing: **55mm**
Sealed Cartridge Bearings(SB): **2pcs**
Freehub Body: **steel Shimano 11S**
Weight: **404g**

OPTIONS

HR3202A **CL 3/8*135*180**

HR1108

LIGHT

Spoke Hole: **13/14G, 28/32/36H**
Axle System: **M10*145**
O. L .D: **135**
Axle Material: **steel**
Flange PCD: **48/58mm**
Flange Spacing: **58.5mm**
Rollong System: **Loose Balls**
Freewheel: **7S**
Weight: **300g**

OPTIONS

HR1108A	**IS6 3/8*135*180**
HR1107A	**IS6 3/8*120*165**

ROAD MTB

HR1208

LIGHT

Spoke Hole: **13/14G, 32/36H**
Axle System: **3/8*145**
O. L .D: **135**
Axle Material: **steel**
Flange PCD: **48mm**
Flange Spacing: **58.5mm**
Rollong System: **Loose Balls**
Freewheel: **7S**
Weight: **264g**

OPTIONS

HR1208A	**CL 3/8*135*180**
HR1207A	**CL 3/8*120*165**

ROAD MTB

HF5102

Spoke Hole: **13/14G, 20/24/28/32/36H**
Axle System: **ID12*100**
O. L .D: **100**
Axle Material: **AL7075**
Flange PCD: **45/58mm**
Flange Spacing: **59mm**
Sealed Cartridge Bearings(SB): **2pcs**
Weight: **158g**

OPTIONS

HF5101 **IS6 M9*100*110**

HR51201

Spoke Hole: **13/14G, 24/28/32/36H**
Axle System: **ID12*142**
O. L .D: **142**
Axle Material: **AL7075**
Flange PCD: **58mm**
Flange Spacing: **56mm**
Sealed Cartridge Bearings(SB): **4pcs**
Freehub Body: **Shimano 11S**
Sram XDR
Weight: **300g**

OPTIONS

HR51202 **IS6 ID12*142 XDR/36T**
HR51203 **IS6 M10*135*145 HG/36T**
HR51204 **IS6 M10*135*145 XDR/36T**
HR51009 **IS6 ID12*142 HG/24T**
HR51010 **IS6 ID12*142 XDR/24T**
HR51011 **IS6 M10*135*145 HG/24T**
HR51012 **IS6 M10*135*145 XDR/24T**

HR51025

Spoke Hole: **13/14G, 24/28/32/36H**
Axle System: **ID12*142**
O. L .D: **142**
Axle Material: **AL7075**
Flange PCD: **58mm**
Flange Spacing: **56mm**
Sealed Cartridge Bearings(SB): **4pcs**
Freehub Body: **Shimano 11S**
Sram XDR
Weight: **295g**

OPTIONS

HR51026 **IS6 ID12*142 XDR/51T**
HR51027 **IS6 M10*135*145 HG/51T**
HR51028 **IS6 M10*135*145 XDR/51T**
HR51041 **IS6 ID12*142 HG/102T**
HR51042 **IS6 ID12*142 XDR/102T**
HR51043 **IS6 M10*135*145 HG/102T**
HR51044 **IS6 M10*135*145 XDR/102T**

HF5202

Spoke Hole: **13/14G,24/28/32/36H**
Axle System: **ID12*100**
O. L .D: **100**
Axle Material: **AL7075**
Flange PCD: **45mm**
Flange Spacing: **61mm**
Sealed Cartridge Bearings(SB): **2pcs**
Weight: **136g**

OPTIONS

HF5201 **CL M9*100*110**

HR52201

Spoke Hole: **13/14G,28/32/36H**
Axle System: **ID12*142**
O. L .D: **142**
Axle Material: **AL7075**
Flange PCD: **54mm**
Flange Spacing: **57mm**
Sealed Cartridge Bearings(SB): **4pcs**
Freehub Body: **Shimano 11S**
Sram XDR
Weight: **287g**

OPTIONS

HR52202 **CL ID12*142 XDR/36T**
HR52203 **CL M10*135*145 HG/36T**
HR52204 **CL M10*135*145 XDR/36T**
HR52009 **CL ID12*142 HG/24T**
HR52010 **CL ID12*142 XDR/24T**
HR52011 **CL M10*135*145 HG/24T**
HR52012 **CL M10*135*145 XDR/24T**

HR52025

Spoke Hole: **13/14G,28/32/36H**
Axle System: **ID12*142**
O. L .D: **142**
Axle Material: **AL7075**
Flange PCD: **54mm**
Flange Spacing: **57mm**
Sealed Cartridge Bearings(SB): **4pcs**
Freehub Body: **Shimano 11S**
Sram XDR
Weight: **277g**

OPTIONS

HR52026 **CL ID12*142 XDR/51T**
HR52027 **CL M10*135*145 HG/51T**
HR52028 **CL M10*135*145 XDR/51T**
HR52041 **CL ID12*142 HG/102T**
HR52042 **CL ID12*142 XDR/102T**
HR52043 **CL M10*135*145 HG/102T**
HR52044 **CL M10*135*145 XDR/102T**

HF4003

Spoke Hole: **14G, 16/20/24H**
Axle System: **M9*108**
O. L .D: **100**
Axle Material: **AL7075**
Flange PCD: **32mm**
Flange Spacing: **78mm**
Sealed Cartridge Bearings(SB): **2pcs**
Weight: **99g**

HR4005

Spoke Hole: **14G, 24H**
Axle System: **M10*130*140**
O. L .D: **130**
Axle Material: **AL7075**
Flange PCD: **39.3/48.5mm**
Flange Spacing: **60.5mm**
Sealed Cartridge Bearings(SB): **4pcs**
Freehub Body: **Shimano 11S**
Sram XDR
Weight: **231g**

OPTIONS

HR4006 **M10*130*140 XDR**

4P 52T XDR HG ONE HUB ALL SOLUTION

CARBON SPOKE

HF6001A

Spoke Hole: **14G, 18/20H**
Axle System: **M9*110**
O. L .D: **100**
Axle Material: **AL7075**
Flange PCD: **39.4mm**
Flange Spacing: **67mm**
Sealed Cartridge Bearings(SB): **2pcs**
Weight: **95g**

CARBON SPOKE

HR6009A

Spoke Hole: **14G, 21/24H**
Axle System: **M10*140**
O. L .D: **130**
Axle Material: **AL7075**
Flange PCD: **36.1/50.3mm**
Flange Spacing: **62.5mm**
Sealed Cartridge Bearings(SB): **4pcs**
Freehub Body: **Shimano 11S**
Sram XDR
Weight: **213g**

OPTIONS

HR6010A **M10*130*140 XDR**

36T 54T XDR HG HOVER RATCHET ONE HUB ALL SOLUTION

HF5104

Spoke Hole: **14G/24**
Axle System: **ID12*100**
O. L .D: **100**
Axle Material: **AL7075**
Flange PCD: **38.4mm**
Sealed Cartridge Bearings(SB): **2pcs**
Weight: **117g**

OPTIONS

HF5103 **IS6 M9*100*110**

HR51073

Spoke Hole: **14G, 24H**
Axle System: **ID12*142**
O. L .D: **142**
Axle Material: **AL7075**
Flange PCD: **38.2/46.3mm**
Flange Spacing: **61mm**
Sealed Cartridge Bearings(SB): **4pcs**
Freehub Body: **Shimano 11S**
Sram XDR
Weight: **246g**

OPTIONS

HR51074 **IS6 ID12*142 XDR/24T**
HR51075 **IS6 M10*135*145 HG/24T**
HR51076 **IS6 M10*135*145 XDR/24T**
HR51217 **IS6 ID12*142 HG/36T**
HR51218 **IS6 ID12*142 XDR/36T**
HR51219 **IS6 M10*135*145 HG/36T**
HR51220 **IS6 M10*135*145 XDR/36T**

4P 24T 36T HG XDR ONE HUB ALL SOLUTION

HR51089

Spoke Hole: **14G, 24H**
Axle System: **ID12*142**
O. L .D: **142**
Axle Material: **AL7075**
Flange PCD: **37.4/51.6mm**
Flange Spacing: **60mm**
Sealed Cartridge Bearings(SB): **2pcs**
Freehub Body: **Shimano 11S**
Sram XDR
Weight: **268g**

OPTIONS

HR51090 **IS6 ID12*142 XDR/51T**
HR51091 **IS6 M10*135*145 HG/51T**
HR51092 **IS6 M10*135*145 XDR/51T**
HR51105 **IS6 ID12*142 HG/102T**
HR51106 **IS6 ID12*142 XDR/102T**
HR51107 **IS6 M10*135*145 HG/102T**
HR51108 **IS6 M10*135*145 XDR/102T**

6P 51T 102T HG XDR ONE HUB ALL SOLUTION

HR52073

Spoke Hole: **14G, 24H**
Axle System: **ID12*142**
O. L .D: **142**
Axle Material: **AL7075**
Flange PCD: **38.2/46.3mm**
Flange Spacing: **63.5mm**
Sealed Cartridge Bearings(SB): **4pcs**
Freehub Body: **Shimano 11S**
Sram XDR
Weight: **233g**

OPTIONS

HR52074 **CL ID12*142 XDR/24T**
HR52075 **CL M10*135*145 HG/24T**
HR52076 **CL M10*135*145 XDR/24T**
HR52217 **CL ID12*142 HG/36T**
HR52218 **CL ID12*142 XDR/36T**
HR52219 **CL M10*135*145 HG/36T**
HR52220 **CL M10*135*145 XDR/36T**

HF5204

Spoke Hole: **14G, 24H**
Axle System: **ID12*100**
O. L .D: **100**
Axle Material: **AL7075**
Flange PCD: **38.4mm**
Flange Spacing: **64.5mm**
Sealed Cartridge Bearings(SB): **2pcs**
Weight: **107g**

OPTIONS

HF5203 **CL M9*100*110**

HR52089

Spoke Hole: **14G, 24H**
Axle System: **ID12*142**
O. L .D: **142**
Axle Material: **AL7075**
Flange PCD: **37.4/51.6mm**
Flange Spacing: **61mm**
Sealed Cartridge Bearings(SB): **4pcs**
Freehub Body: **Shimano 11S**
Sram XDR
Weight: **256g**

OPTIONS

HR52090 **CL ID12*142 XDR/51T**
HR52091 **CL M10*135*145 HG/51T**
HR52092 **CL M10*135*145 XDR/51T**
HR52105 **CL ID12*142 HG/102T**
HR52106 **CL ID12*142 XDR/102T**
HR52107 **CL M10*135*145 HG/102T**
HR52108 **CL M10*135*145 XDR/102T**

CARBON SPOKE

CARBON SPOKE

HR6201

Spoke Hole: **14G, 21/24H**
Axle System: **ID12*142**
O. L .D: **142**
Axle Material: **AL7075**
Flange PCD: **38.5/61.1mm**
Flange Spacing: **61.7mm**
Sealed Cartridge Bearings(SB): **4pcs**
Freehub Body: **Shimano 11S**
Sram XDR
Weight: **275g**

OPTIONS

HR6202 **CL ID12*142 XDR/51T**
HR6203 **CL M10*135*145 HG/51T**
HR6204 **CL M10*135*145 XDR/51T**
HR6205 **CL ID12*142 HG/102T**
HR6206 **CL ID12*142 XDR/102T**
HR6207 **CL M10*135*145 HG/102T**
HR6208 **CL M10*135*145 XDR/102T**

HF6202

Spoke Hole: **14G, 18/21/24H**
Axle System: **ID12*100**
O. L .D: **100**
Axle Material: **AL7075**
Flange PCD: **34.5/46.1mm**
Flange Spacing: **63.2mm**
Sealed Cartridge Bearings(SB): **2pcs**
Weight: **108g**

OPTIONS

HF6201 **CL M9*100*110**

CARBON SPOKE

HR6209

Spoke Hole: **14G, 21/24H**
Axle System: **ID12*142**
O. L .D: **142**
Axle Material: **AL7075**
Flange PCD: **40.6/50.3mm**
Flange Spacing: **62.8mm**
Sealed Cartridge Bearings(SB): **4pcs**
Freehub Body: **Shimano 11S**
Sram XDR
Weight: **227g**

OPTIONS

HR6210 **CL ID12*142 XDR**
HR6211 **CL M10*135*145 HG**
HR6212 **CL M10*135*145 XDR**

HR51057

Spoke Hole: **13/14G, 24/28/32/36H**
Axle System: **ID12*142**
O. L .D: **142**
Axle Material: **AL7075**
Flange PCD: **58mm**
Flange Spacing: **56mm**
Sealed Cartridge Bearings(SB): **4pcs**
Freehub Body: **Shimano 11S**
Sram XDR
Weight: **268g**

OPTIONS

HR51058 **IS6 ID12*142 XDR**
HR51059 **IS6 M10*135*145 HG**
HR51060 **IS6 M10*135*145 XDR**

HR52057

Spoke Hole: **13/14G, 24/28/32/36H**
Axle System: **ID12*142**
O. L .D: **142**
Axle Material: **AL7075**
Flange PCD: **54mm**
Flange Spacing: **55.5mm**
Sealed Cartridge Bearings(SB): **4pcs**
Freehub Body: **Shimano 11S**
Sram XDR
Weight: **250g**

OPTIONS

HR52058 **CL ID12*142 XDR**
HR52059 **CL M10*135*145 HG**
HR52060 **CL M10*135*145 XDR**

HR51121

Spoke Hole: **14G, 28H**
Axle System: **ID12*142**
O. L .D: **142**
Axle Material: **AL7075**
Flange PCD: **38.4/44.6mm**
Flange Spacing: **59.3mm**
Sealed Cartridge Bearings(SB) : **4pcs**
Freehub Body: **Shimano 11S**
Sram XDR
Weight: **241g**

OPTIONS

HR52122 **CL ID12*142 XDR**
HR52123 **CL M10*135*145HG**
HR52124 **CL M10*135*145 XDR**

HR52121

Spoke Hole: **14G, 28H**
Axle System: **ID12*142**
O. L .D: **142**
Axle Material: **AL7075**
Flange PCD: **38.4/44.6mm**
Flange Spacing: **61.6mm**
Sealed Cartridge Bearings(SB): **4pcs**
Freehub Body: **Shimano 11S**
Sram XDR
Weight: **227g**

OPTIONS

HR52122 **CL ID12*142 XDR**
HR52123 **CL M10*135*145 HG**
HR52124 **CL M10*135*145 XDR**

HF3101B

Spoke Hole: **13/14G, 28/32/36H**
Axle System: **M9*110**
O. L .D: **100**
Axle Material: **AL7075**
Flange PCD: **45/58mm**
Flange Spacing: **59.5mm**
Sealed Cartridge Bearings(SB): **2pcs**
Weight: **204g**

HR51037A

Spoke Hole: **13/14G, 28/32/36H**
Axle System: **M10*145**
O. L .D: **135**
Axle Material: **steel**
Flange PCD: **58mm**
Flange Spacing: **56.5mm**
Sealed Cartridge Bearings(SB): **4pcs**
Freehub Body: **steel Shimano 11S**
Weight: **490g**

OPTIONS

HR51038A **IS6 M10*135*145 XD/102T**
HR51046A **IS6 M10*135*145 XDR/102T**
HR51275A **IS6 M10*135*145 MS/102T**

HF3201

Spoke Hole: **13/14G, 28/32/36H**
Axle System: **M9*110**
O. L .D: **100**
Axle Material: **steel**
Flange PCD: **45mm**
Flange Spacing: **60.5mm**
Sealed Cartridge Bearings(SB): **2pcs**
Weight: **204g**

OPTIONS

HF3101A **CL 3/8*100*145**

HR3202

Spoke Hole: **13/14G, 28/32/36H**
Axle System: **M10*145**
O. L .D: **135**
Axle Material: **steel**
Flange PCD: **48mm**
Flange Spacing: **55mm**
Sealed Cartridge Bearings(SB): **2pcs**
Freehub Body: **steel Shimano 11S**
Weight: **419g**

OPTIONS

HR3102A **CL 3/8*135*180**

HF5107

Spoke Hole: **13/14G, 28/32/36H**
Axle System: **ID15*100**
O. L .D: **100**
Axle Material: **AL7075**
Flange PCD: **58mm**
Flange Spacing: **59mm**
Sealed Cartridge Bearings(SB): **2pcs**
Weight: **169g**

OPTIONS

HF5107D	**IS6 ID15*100/Axle steel**
HF5108	**IS6 M9*100*110**
HF5108D	**IS6 M9*100*110/Axle steel**
HF5109	**IS6 M9*110*120**
HF5109D	**IS6 M9*110*120/Axle steel**
HF5110	**IS6 ID15*110**
HF5110D	**IS6 ID15*110/Axle steel**

HR51193

Spoke Hole: **13/14G, 28/32/36H**
Axle System: **ID12*142**
O. L .D: **142**
Axle Material: **AL7075**
Flange PCD: **58mm**
Flange Spacing: **56mm**
Sealed Cartridge Bearings(SB): **4pcs**
Freehub Body: **Shimano 11S**
Shimano Micro Spline
Sram XD
Weight: **300g**

OPTIONS

HR51194	**IS6 ID12*142 XD/36T**
HR51281	**IS6 ID12*142 MS/36T**
HR51195	**IS6 M10*135*145 HG/36T**
HR51196	**IS6 M10*135*145 XD/36T**
HR51282	**IS6 M10*135+145 MS/36T**
HR51001	**IS6 ID12*142 HG/24T**
HR51002	**IS6 ID12*142 XD/24T**
HR51265	**IS6 ID12*142 MS/24T**
HR51003	**IS6 M10*135*145 HG/24T**
HR51004	**IS6 M10*135*145 XD/24T**
HR51266	**IS6 M10*135*145 MS/24T**

HF5207

Spoke Hole: **13/14G, 28/32/36H**
Axle System: **ID15*100**
O. L .D: **100**
Axle Material: **AL7075**
Flange PCD: **45mm**
Flange Spacing: **61mm**
Sealed Cartridge Bearings(SB): **2pcs**
Weight: **126g**

OPTIONS

HF5207D	**CL ID15*100/Axle steel**
HF5208	**CL M9*100*110**
HF5208D	**CL M9*100*110/Axle steel**
HF5209	**CL M9*110*120**
HF5209D	**CL M9*110*120/Axle steel**
HF5210	**CL ID15*110**
HF5210D	**CL ID15*110/Axle steel**

HR52193

Spoke Hole: **13/14G, 24/28/32/36H**
Axle System: **ID12*142**
O. L .D: **142**
Axle Material: **AL7075**
Flange PCD: **54mm**
Flange Spacing: **57mm**
Sealed Cartridge Bearings(SB): **4pcs**
Freehub Body: **Shimano 11S**
Shimano Micro Spline
Sram XD
Weight: **287g**

OPTIONS

HR52194	**CL ID12*142 XD/36T**
HR52281	**CL ID12*142 MS/36T**
HR52195	**CL M10*135*145 HG/36T**
HR52196	**CL M10*135*145 XD/36T**
HR52282	**CL M10+135*145 MS/36T**
HR52001	**CL ID12*142 HG/24T**
HR52002	**CL ID12*142 XD/24T**
HR52265	**CL ID12*142 MS/24T**
HR52003	**CL M10*135*145 HG/24T**
HR52004	**CL M10*135*145 XD/24T**
HR52266	**CL M10*135*145 MS/24T**

HR51017

Spoke Hole: **13/14G, 28/32/36H**
Axle System: **ID12*142**
O. L .D: **142**
Axle Material: **AL7075**
Flange PCD: **58mm**
Flange Spacing: **56mm**
Sealed Cartridge Bearings(SB): **4pcs**
Freehub Body: **Shimano 11S**
Shimano Micro Spline
Sram XD
Weight: **295g**

OPTIONS

HR51018 **IS6 ID12*142 XD/51T**
HR51269 **IS6 ID12*142 MS/51T**
HR51019 **IS6 M10*135*145 HG/51T**
HR51020 **IS6 M10*135*145 XD/51T**
HR51270 **IS6 M10*135*145 MS/51T**
HR51033 **IS6 ID12*142 HG/102T**
HR51034 **IS6 ID12*142 XD/102T**
HR51273 **IS6 ID12*142 MS/102T**
HR51035 **IS6 M10*135*145 HG/102T**
HR51036 **IS6 M10*135*145 XD/102T**
HR51274 **IS6 M10*135*145 MS/102T**

HR52017

Spoke Hole: **13/14G, 28/32/36H**
Axle System: **ID12*142**
O. L .D: **142**
Axle Material: **AL7075**
Flange PCD: **58mm**
Flange Spacing: **57mm**
Sealed Cartridge Bearings(SB): **4pcs**
Freehub Body: **Shimano 11S**
Shimano Micro Spline
Sram XD
Weight: **277g**

OPTIONS

HR52018 **CL ID12*142 XD/51T**
HR52269 **CL ID12*142 MS/51T**
HR52019 **CL M10*135*145 HG/51T**
HR52020 **CL M10*135*145 XD/51T**
HR52270 **CL M10*135*145 MS/51T**
HR52033 **CL ID12*142 HG/102T**
HR52034 **CL ID12*142 XD/102T**
HR52273 **CL ID12*142 MS/102T**
HR52035 **CL M10*135*145 HG/102T**
HR52036 **CL M10*135*145 XD/102**
HR52274 **TCL M10*135*145 MS/102T**

Boost

HF5110

Spoke Hole: **13/14G, 28/32/36H**
Axle System: **ID15*110**
O. L .D: **110**
Axle Material: **AL7075**
Flange PCD: **58mm**
Flange Spacing: **69mm**
Sealed Cartridge Bearings(SB): **2pcs**
Weight: **177g**

OPTIONS

HF5110D **IS6 ID15*110/Axle steel**
HF5109 **IS6 M9*110*120**
HF5109D **IS6 M9*110*120/Axle steel**

Boost

HR51129

Spoke Hole: **13/14G, 28/32/36H**
Axle System: **ID12*148**
O. L .D: **148**
Axle Material: **AL7075**
Flange PCD: **58mm**
Flange Spacing: **62mm**
Sealed Cartridge Bearings(SB): **4pcs**
Freehub Body: **Shimano 11S**
Shimano Micro Spline
Sram XD
Weight: **310g**

OPTIONS

HR51130 **IS6 ID12*148 XD/36T**
HR51241 **IS6 ID12*148 MS/36T**
HR51131 **IS6 M10*141*151 HG/36T**
HR51132 **IS6 M10*141*151 XD/36T**
HR51242 **IS6 M10*135*145 MS/36T**

Boost

HF5210

Spoke Hole: **13/14G, 28/32/36H**
Axle System: **ID15*110**
O. L .D: **110**
Axle Material: **AL7075**
Flange PCD: **45mm**
Flange Spacing: **71mm**
Sealed Cartridge Bearings(SB): **2pcs**
Weight: **134g**

OPTIONS

HF5210D **CL M9*100*110/Axle steel**
HF5209 **CL M9*110*120**
HF5209D **CL ID15*110/Axle steel**

Boost

HR52129

Spoke Hole: **13/14G, 28/32/36H**
Axle System: **ID12*148**
O. L .D: **148**
Axle Material: **AL7075**
Flange PCD: **54mm**
Flange Spacing: **63mm**
Sealed Cartridge Bearings(SB): **4pcs**
Freehub Body: **Shimano 11S**
Shimano Micro Spline
Sram XD
Weight: **297g**

OPTIONS

HR52130 **CL ID12*148 XD/36T**
HR52241 **CL ID12*148 MS/36T**
HR52131 **CL M10*141*151 HG/36T**
HR52132 **CL M10*141*151 XD/36T**
HR52242 **CL M10*141*151 MS/36T**

HF5106

Spoke Hole: **14G/28**
Axle System: **ID15*100**
O. L .D: **100**
Axle Material: **AL7075**
Flange PCD: **38.4mm**
Flange Spacing: **56mm**
Sealed Cartridge Bearings(SB): **2pcs**
Weight: **169g**

OPTIONS

HF5105 **IS6 M9*100*110**

HR51209

Spoke Hole: **14G, 28H**
Axle System: **ID12*142**
O. L .D: **142**
Axle Material: **AL7075**
Flange PCD: **38.2/46.3mm**
Flange Spacing: **61mm**
Sealed Cartridge Bearings(SB): **4pcs**
Freehub Body: **Shimano 11S**
Shimano Micro Spline
Sram XD
Weight: **246g**

OPTIONS

HR51210 **IS6 ID12*142 XD/36T**
HR51301 **IS6 ID12*142 MS/36T**
HR51211 **IS6 M10*135*145 HG/36T**
HR51212 **IS6 M10*135*145 XD/36T**
HR51302 **IS6 M10*135*145 MS/36T**
HR51065 **IS6 ID12*142 HG/24T**
HR51066 **IS6 ID12*142 XD/24T**
HR51285 **IS6 ID12*142 MS/24T**
HR5 1067 **IS6 M10*135*145 HG/24T**
HR51068 **IS6 M10*135*145 XD/24T**
HR51286 **IS6 M10*135*145 MS/24T**

HR51081

Spoke Hole: **14G, 28H**
Axle System: **ID12*142**
O. L .D: **142**
Axle Material: **AL7075**
Flange PCD: **58mm**
Flange Spacing: **60mm**
Sealed Cartridge Bearings(SB): **4pcs**
Freehub Body: **Shimano 11S**
Shimano Micro Spline
Sram XD
Weight: **268g**

OPTIONS

HR51082 **CL ID12*142 XD/51T**
HR51289 **CL ID12*142 MS/51T**
HR51083 **CL M10*135*145 HG/51T**
HR51184 **CL M10*135*145 XD/51T**
HR51290 **CL M10*135*145 MS/51T**
HR51097 **CL ID12*142 HG/102T**
HR51098 **CL ID12*142 XD/102T**
HR51293 **CL ID12*142 MS/102T**
HR51099 **CL M10*135*145 HG/102T**
HR51100 **CL M10*135*145 XD/102T**
HR51294 **CL M10*135*145 MS/102T**

HF5206

Spoke Hole: **14G/28**
Axle System: **ID15*100**
O. L .D: **100**
Axle Material: **AL7075**
Flange PCD: **38.4mm**
Flange Spacing: **63.1mm**
Sealed Cartridge Bearings(SB): **2pcs**
Weight: **121g**

OPTIONS

HF5205 **CL M9*100*110**

HR52209

Spoke Hole: **14G, 28H**
Axle System: **ID12*142**
O. L .D: **142**
Axle Material: **AL7075**
Flange PCD: **38.2/46.3mm**
Flange Spacing: **63.5mm**
Sealed Cartridge Bearings(SB): **4pcs**
Freehub Body: **Shimano 11S**
Shimano Micro Spline
Sram XD
Weight: **233g**

OPTIONS

HR52210 **CL ID12*142 XD/36T**
HR52301 **CL ID12*142 MS/36T**
HR52211 **CL M10*135*145 HG/36T**
HR52212 **CL M10*135*145 XD/36T**
HR52302 **CL M10*135+145 MS/36T**
HR52065 **CL ID12*142 HG/24T**
HR52066 **CL ID12*142 XD/24T**
HR52285 **CL ID12*142 MS/24T**
HR52067 **CL M10*135*145 HG/24T**
HR52068 **CL M10*135*145 XD/24T**
HR52286 **CL M10*135*145 MS/24T**

HR52081

Spoke Hole: **14G, 28H**
Axle System: **ID12*142**
O. L .D: **142**
Axle Material: **AL7075**
Flange PCD: **38.2/46.3mm**
Flange Spacing: **63.5mm**
Sealed Cartridge Bearings(SB): **4pcs**
Freehub Body: **Shimano 11S**
Shimano Micro Spline
Sram XD
Weight: **233g**

OPTIONS

HR52082 **CL ID12*142 XD/51T**
HR52289 **CL ID12*142 MS/51T**
HR52083 **CL M10*135*145 HG/51T**
HR52184 **CL M10*135*145 XD/51T**
HR52290 **CL M10*135*145 MS/51T**
HR52097 **CL ID12*142 HG/102T**
HR52098 **CL ID12*142 XD/102T**
HR52293 **CL ID12*142 MS/102T**
HR52099 **CL M10*135*145 HG/102T**
HR52100 **CL M10*135*145 XD/102T**
HR52294 **CL M10*135*145 MS/102T**

Boost

HF5112

Spoke Hole: **14G/28**
Axle System: **ID15*110**
O. L .D: **110**
Axle Material: **AL7075**
Flange PCD: **38.4mm**
Flange Spacing: **66mm**
Sealed Cartridge Bearings(SB): **2pcs**
Weight: **177g**

OPTIONS

HF5111 **IS6 M9*110*120**

Boost

HR51161

Spoke Hole: **14G, 28H**
Axle System: **ID12*148**
O. L .D: **148**
Axle Material: **AL7075**
Flange PCD: **38.2/46.3mm**
Flange Spacing: **67mm**
Sealed Cartridge Bearings(SB): **4pcs**
Freehub Body: **Shimano 11S**
Shimano Micro Spline
Sram XD
Weight: **256g**

OPTIONS

HR51162 **IS6 ID12*148 XD/36T**
HR51261 **IS6 ID12*148 MS/36T**
HR51163 **IS6 M10*141*151 HG/36T**
HR51164 **IS6 M10*141*151 XD/36T**
HR51262 **IS6 M10*141*151 MS/36T**

Boost

HF5212

Spoke Hole: **14G/28**
Axle System: **ID15*110**
O. L .D: **110**
Axle Material: **AL7075**
Flange PCD: **38.4mm**
Flange Spacing: **73.1mm**
Sealed Cartridge Bearings(SB): **2pcs**
Weight: **129g**

OPTIONS

HF5211 **CL M9*110*120**

Boost

HR52161

Spoke Hole: **14G, 28H**
Axle System: **ID12*148**
O. L .D: **148**
Axle Material: **AL7075**
Flange PCD: **38.2/46.3mm**
Flange Spacing: **69.5mm**
Sealed Cartridge Bearings(SB): **4pcs**
Freehub Body: **Shimano 11S**
Shimano Micro Spline
Sram XD
Weight: **243g**

OPTIONS

HR52162 **CL ID12*142 XD/36T**
HR52261 **CL ID12*142 MS/36T**
HR52163 **CL M10*145*151 HG/36T**
HR52164 **CL M10*145*151 XD/36T**
HR52262 **CL M10*145*151 MS/36T**

HR51049

Spoke Hole: **13/14G, 28/32/36H**
Axle System: **ID12*142**
O. L .D: **142**
Axle Material: **AL7075**
Flange PCD: **58mm**
Flange Spacing: **56mm**
Sealed Cartridge Bearings(SB): **4pcs**
Freehub Body: **Shimano 11S**
Shimano Micro Spline
Sram XD
Weight: **268g**

OPTIONS

HR51050 **IS6 ID12*142 XD**
HR51277 **IS6 ID12*142 MS**
HR51051 **IS6 M10*135*145 HG**
HR51052 **IS6 M10*135*145 XD**
HR51278 **IS6 M10*135+145 MS**

HR52049

Spoke Hole: **13/14G, 28/32/36H**
Axle System: **ID12*142**
O. L .D: **142**
Axle Material: **AL7075**
Flange PCD: **54mm**
Flange Spacing: **55.5mm**
Sealed Cartridge Bearings(SB): **4pcs**
Freehub Body: **Shimano 11S**
Shimano Micro Spline
Sram XD
Weight: **250g**

OPTIONS

HR52050 **CL ID12*142 XD**
HR52277 **CL ID12*142 MS**
HR52051 **CL M10*135*145 HG**
HR52052 **CL M10*135*145 XD**
HR52278 **CL M10*135*145 MS**

HR51113

Spoke Hole: **14G/28**
Axle System: **ID12*142**
O. L .D: **142**
Axle Material: **AL7075**
Flange PCD: **38.4/44.6mm**
Flange Spacing: **59mm**
Sealed Cartridge Bearings(SB): **4pcs**
Freehub Body: **Shimano 11S**
Shimano Micro Spline
Sram XD
Weight: **241g**

OPTIONS

HR51114 **IS6 ID12*142 XD**
HR51297 **IS6 ID12*142 MS**
HR51115 **IS6 M10*135*145 HG**
HR51116 **IS6 M10*135*145 XD**
HR51298 **IS6 M10*135*145 MS**

HR52113

Spoke Hole: **14G/28**
Axle System: **ID12*142**
O. L .D: **142**
Axle Material: **AL7075**
Flange PCD: **38.4/44.6mm**
Flange Spacing: **59mm**
Sealed Cartridge Bearings(SB): **4pcs**
Freehub Body: **Shimano 11S**
Shimano Micro Spline
Sram XD
Weight: **227g**

OPTIONS

HR52114 **CL ID12*142 XD**
HR52297 **CL ID12*142 MS**
HR52115 **CL M10*135*145HG**
HR52116 **CL M10*135*145 XD**
HR52298 **CL M10*135*145 MS**

HF7101

Spoke Hole: **13G, 32/36H**
Axle System: **ID15*110**
O. L .D: **110**
Axle Material: **AL7075**
Flange PCD: **58mm**
Flange Spacing: **66mm**
Sealed Cartridge Bearings(SB): **2pcs**
Weight: **217g**

OPTIONS

HF7102 **IS6 ID20*110/10.5**
HF7102A **IS6 ID20*110/15.25**

Boost

HR7108

Spoke Hole: **13G, 32/36H**
Axle System: **ID12*148**
O. L .D: **148**
Axle Material: **steel**
Flange PCD: **58mm**
Flange Spacing: **61mm**
Sealed Cartridge Bearings(SB): **5pcs**
Freehub Body: **Shimano 11S**
Weight: **460g**

OPTIONS

HR7110 **IS6 ID12*148 XD**
HR7112 **IS6 ID12*148 MS**

6P 51T HG XD HOVER RATCHET

Boost ONE HUB ALL SOLUTION

HF8101

Spoke Hole: **13G, 32/36H**
Axle System: **ID15*135**
O. L .D: **135**
Axle Material: **steel**
Flange PCD: **58mm**
Flange Spacing: **92mm**
Sealed Cartridge Bearings(SB): **2pcs**
Weight: **260g**

HF8102

Spoke Hole: **13G, 32/36H**
Axle System: **ID15*150**
O. L .D: **150**
Axle Material: **steel**
Flange PCD: **58mm**
Flange Spacing: **108.5mm**
Sealed Cartridge Bearings(SB): **2pcs**
Weight: **294g**

HF1103

Spoke Hole: **13G, 32/36H**
Axle System: **M10*145**
O. L .D: **135**
Axle Material: **steel**
Flange PCD: **58mm**
Flange Spacing: **93mm**
Rollong System: **Loose Balls**
Weight: **227g**

OPTIONS

HF1103A **IS6 3/8*135*180(Loose Balls)**

HR8107

Spoke Hole: **13G, 32/36H**
Axle System: **ID12*190**
O. L .D: **190**
Axle Material: **steel**
Flange PCD: **58mm**
Flange Spacing: **90mm**
Sealed Cartridge Bearings(SB): **5pcs**
Freehub Body: **Shimano 11S**
Weight: **275g**

OPTIONS

HR8107A **IS6 M12*190*270 HG**
HR8108 **IS6 ID12*190 XD**
HR8109 **IS6 ID12*190 MS**
HR8110 **IS6 ID12*197 HG**
HR8111 **IS6 ID12*197 XD**
HR8112 **IS6 ID12*197 MS**

HR1105A

Spoke Hole: **13G, 32/36H**
Axle System: **3/8*235**
O. L .D: **190**
Axle Material: **steel**
Flange PCD: **58mm**
Rollong System: **Loose Balls**
Freehub Body: **Shimano 11S**
Weight: **518g**

HF9101

Spoke Hole: **13G, 32/36/48H**
Axle System: **M14*165**
O. L .D: **100**
Axle Material: **steel**
Flange PCD: **45mm**
Flange Spacing: **72mm**
Rollong System: **Loose Balls**
Weight: **346g**

OPTIONS

HF9102 **3/8*100*150**

HR9101

Spoke Hole: **13G, 32/36/48H**
Axle System: **M14*180**
O. L .D: **110**
Axle Material: **steel**
Flange PCD: **68mm**
Flange Spacing: **58.5mm**
Sealed Cartridge Bearings(SB): **1pcs**
Rollong System: **Loose Balls**
Freewheel: **steel w/12T~18T**
Weight: **523g**

HR9102

Spoke Hole: **13G, 32/36/48H**
Axle System: **M14*180**
O. L .D: **110**
Axle Material: **steel**
Flange PCD: **68mm**
Flange Spacing: **64mm**
Sealed Cartridge Bearings(SB): **1pcs**
Rollong System: **Loose Balls**
Freewheel: **steel 9T Driver**
Weight: **537g**

HF5110E

Spoke Hole: **13G, 32/36/48H**
Axle System: **ID15*110**
O. L .D: **110**
Axle Material: **steel**
Flange PCD: **58mm**
Flange Spacing: **69.5mm**
Sealed Cartridge Bearings(SB): **2pcs**
Weight: **244g**

HR9103

Spoke Hole: **13G, 32/36/48H**
Axle System: **M14*190**
O. L .D: **135**
Axle Material: **steel**
Flange PCD: **68mm**
Flange Spacing: **75mm**
Sealed Cartridge Bearings(SB): **5PCS**
Freewheel: **steel w/12T~18T**
Weight: **603g**

HR9104

Spoke Hole: **13G, 32/36/48H**
Axle System: **ID12*142**
O. L .D: **142**
Axle Material: **steel**
Flange PCD: **68mm**
Flange Spacing: **79.5mm**
Sealed Cartridge Bearings(SB): **5PCS**
Freewheel: **steel w/12T~18T**
Weight: **440g**

OPTIONS

HR9105 **IS6 ID12*135**

HOF01BS

Spoke Hole: **14G, 28/32/36H**
Axle System: **M9*140**
O. L .D: **100**
Axle Material: **steel**
Flange PCD: **60mm**
Flange Spacing: **72mm**
Sealed Cartridge Bearings(SB): **2pcs**
Weight: **225g**

OPTIONS

HOF02BS **M9*100*140 (SMALL FLANGE)**

HOF01CS

Spoke Hole: **14G, 28/32/36H**
Axle System: **M9*140**
O. L .D: **100**
Axle Material: **steel**
Flange PCD: **60mm**
Flange Spacing: **72mm**
Rollong System: **Loose Balls**
Weight: **254g**

OPTIONS

HOF02CS **M9*100*140 (SMALL FLANGE)**

HOR01BS

Spoke Hole: **14G, 28/32/36H**
Axle System: **M10*165**
O. L .D: **120**
Axle Material: **steel**
Flange PCD: **60mm**
Flange Spacing: **67mm**
Sealed Cartridge Bearings(SB): **2pcs**
Freewheel: **Thread Type L: Double Thread**
R: B.C. 1.37*24T
Weight: **339g**

OPTIONS

HOR02BS **M10*120*165 (SMALL FLANGE)**

HOR01CS

Spoke Hole: **14G, 28/32/36H**
Axle System: **M10*165**
O. L .D: **120**
Axle Material: **steel**
Flange PCD: **60mm**
Flange Spacing: **67mm**
Rollong System: **Loose Balls**
Freewheel: **Thread Type L: Double Thread**
R: B.C. 1.37*24T
Weight: **365g**

OPTIONS

HOR02CS **M10*120*165 (SMALL FLANGE)**

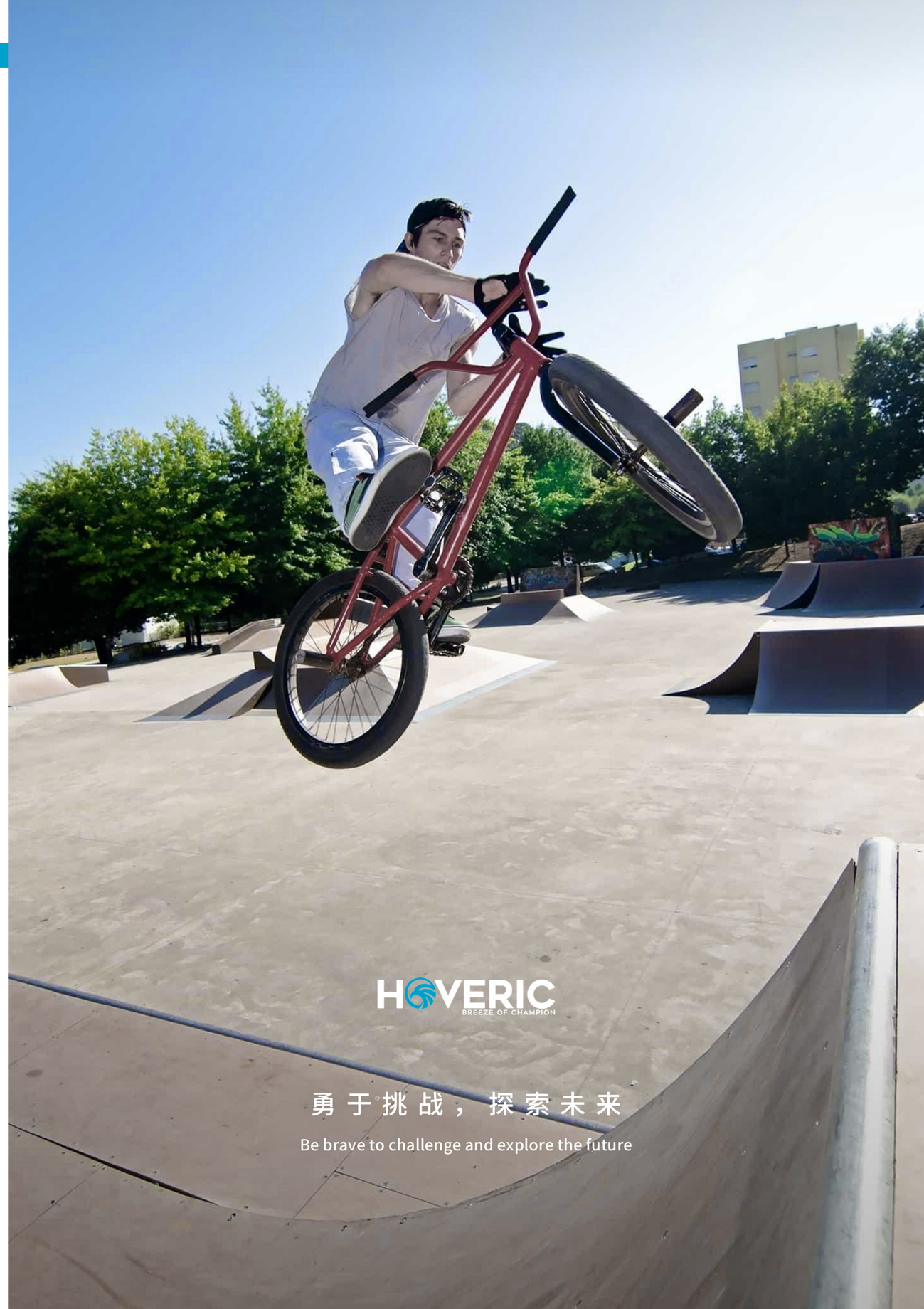

HTRCD77L

Spoke Hole: **12/13G, 36H**
Axle System: **ID15/ID17**
O. L .D: **77**
Axle Material: **AL7075**
Flange PCD: **58mm**
Flange Spacing: **57mm**
Sealed Cartridge Bearings(SB):**2pcs**
Weight: **201g**

HTRCD77R

Spoke Hole: **12/13G, 36H**
Axle System: **ID15/ID17**
O. L .D: **77**
Flange PCD: **58mm**
Flange Spacing: **57mm**
Weight: **208g**

HTRCD100L

Spoke Hole: **12/13G, 36H**
Axle System: **ID15/ID17**
O. L .D: **77**
Axle Material: **AL7075**
Flange PCD: **58mm**
Flange Spacing: **80mm**
Sealed Cartridge Bearings(SB):**2pcs**
Weight: **237g**

HTRCD100R

Spoke Hole: **12/13G, 36H**
Axle System: **ID15/ID17**
O. L .D: **77**
Flange PCD: **58mm**
Flange Spacing: **80mm**
Weight: **241g**

HTRC782

Hub System:**MTB/FTA**
Axle Material: **steel**
ONE AXLE BODY

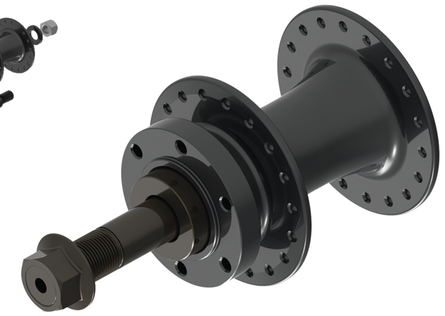

HTRCD77LA

Spoke Hole: **12/13G, 36H**
Axle System: **M14*50**
O. L .D: **77**
Axle Material: **steel**
Flange PCD: **58mm**
Flange Spacing: **58mm**
Sealed Cartridge Bearings(SB): **2pcs**
Weight: **434g**

HTRC654D

Hub System:**MTB/FTA**
Axle Material: **steel**
SEPERATE AXLE BODY

HDM001

DIFFERENTIAL MECHANISM
APPLICABLE TO 250-1000W

CASSETTE BODY TYPE

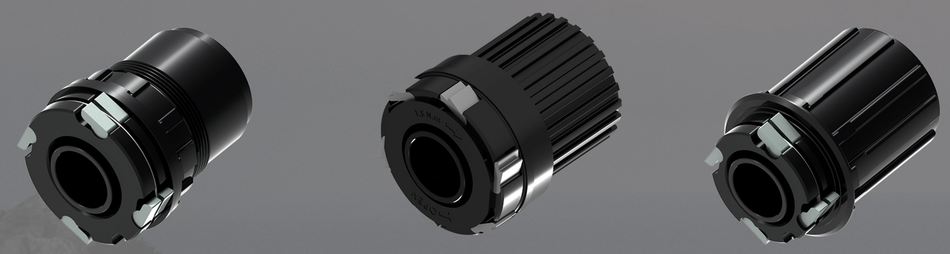

2 seal bearing / 4 Pawl and 1 Spring
2 seal bearing / 4 Pawl and 4 Spring
2 seal bearing / 6 Pawl and 6 Spring
AL7075 / Cr-Mo Shimano 8/9/10/11/12S for MTB and ROAD
AL7075 / Cr-Mo Shimano MicroSpline 12S for MTB
AL7075 / Cr-Mo Sram XD/XDR Driver for MTB and ROAD

HOVER RATCHET BODY TYPE

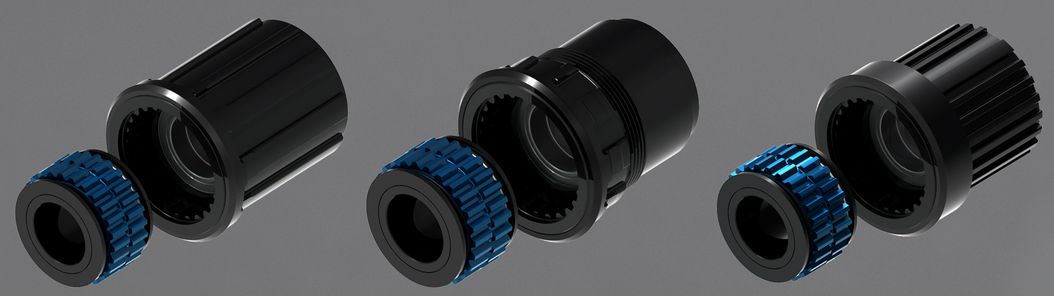

2 seal bearing / 36 Pawl and 54 Pawl
AL7075 / Cr-Mo Shimano 8/9/10/11/12S for MTB and ROAD
AL7075 / Cr-Mo Shimano MicroSpline 12S for MTB
AL7075 / Cr-Mo Sram XD/XDR Driver for MTB and ROAD

SCREWING TYPE

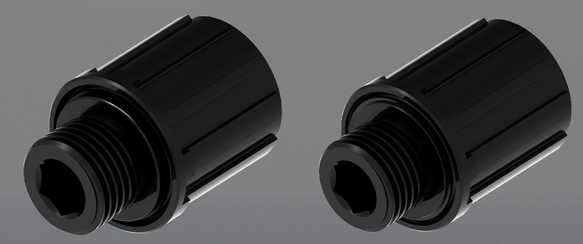

Loose Balls 8/9/10S for MTB
Loose Balls 11/12S for ROAD
For seal bearing hubs 8/9/10/11S for MTB
For seal bearing hubs 11/12S for ROAD
Loose Balls 7S
For seal bearing hubs 7S

QUICK RELEASE

HQR05B
M5*109/115/148.5/151/157/166/186/206

HQR05C
M5*109/115/148.5/151/157/166/186/206

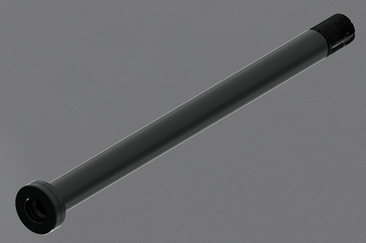

HTRA:THRU AXLE
TRA-12 M12*1.5/1.75
TRA-15 M15*1.5/1.75

HTRQ:THRU AXLE QUICK RELEASE
TRQ-12 M12*1.5/1.75
TRQ-15 M15*1.5/1.75